Penerbit Akademia Baru

Journal of Advanced Research in Engineering Knowledge

Journal homepage: www.akademiabaru.com/arek.html
ISSN: 2600-8440

Real Scale Home Control Automation System for Different Loads Application using Smartphone

Open Access

Khairul Annas Abd Ghani[1], Nur Irwany Ahmad[1,*], Muhammad Zaid Aihsan[1], Diyya Hidayah Abd Rahman[1], Nazrul Azril Nazlan[2], Muhammad Sirajuddin Muhammad Azhar Walter[1]

[1] Department of Electrical Engineering, Faculty of Electrical Engineering Universiti Malaysia Perlis, 02100, Padang Besar, Perlis, Malaysia
[2] Plexus Manufacturing Sdn Bhd, Plot 139 Bayan Lepas, Free Industrial Zone, Phase 2, 11900 Bayan Lepas, Penang, Malaysia

ARTICLE INFO

Article history:
Received 5 November 2018
Received in revised form 4 December 2018
Accepted 12 December 2018
Available online 16 December 2018

Keywords:
Arduino Uno, Arduino Bluetooth Module, Android Studio

ABSTRACT

The technology is a never ending process and it will keep growing in order to improve the quality of a products, services and systems. It is a huge contribution to the society when designing a product by implementing the latest technology where it can give a lot of benefits to others. This project presented the design of a real scale home control automation system that allow user to control different loads wirelessly via smartphone. Home control automation system not only to increase user convenience but also enhance time efficiency. The main objective of this project is to assists handicapped and senior citizen which allow them to control different loads effortlessly. A standard switch is used to turn on and off a device where it is installed fix at the spot. Therefore, it is not user friendly for the elderly and disabled people. This project is focusing on design of home control automation system using Arduino Uno as a controller while smartphones as a switch which it can be control from 33 metre range. The loads are connected to the controller via relay and communication is established between the Arduino Uno and smartphone through Arduino Bluetooth module. An Android application is developed to provide user a friendly graphical user interface to control loads via Android Studio Application method.

1. Introduction

Nowadays, most people use a smart phone in their daily life as it largely fulfil their user's needs and make the life more better and easier. According to the ABI Research, at the end of year 2013, 1.4 billion smart phones had been in used where 798 million of them run Android, 294 million run Apple's iOS, and 45 million run Windows Phone [1]. Thus, this project was created in order to demonstrate a real scale home control automation system that allow user to control different loads wirelessly via smartphone. Home control automation system not only to increase user convenience but also enhance time efficiency [2-3].

* *Corresponding author.*
E-mail address: irwany@unimap.edu.my (Nur Irwany Ahmad)

This project focusing on design of home control automation system by using Arduino Uno as a controller while smartphones as a switch which it can be control loads from an assured range [2]. The loads were connected to the controller through relay and smartphone will send the signal to the controller via Bluetooth module connectivity to on and off the loads. An android application and coding for loads were developed to automate this system.

2. Project Construction

2.1 Design Concept of Real Scale Home Control Automation System using Arduino

This project is divided into two parts, which are programming and wiring for loads. In this project, Android Studio application is used in order to create a user interface on Android application smartphone. Instead of using Android Studio application, the developer can build Android application using different alternative languages such as Xamarin, MIT and Eclips [4]. Apart from that, for the coding part of Arduino there will be divided into two different parts which are coding for different loads using C++ language and configuration for Bluetooth module connection. There will be a hardware configuration for controller part that focusing on the connection between Arduino and Bluetooth module. Through Bluetooth module, the application on smartphone can transmit information to the Arduino which contain complete coding of different loads which are lamp, fan and socket [5-6].

Besides that, for hardware configuration wiring system it will focus on connection between loads to the main supply. The connection of neutral and ground is a crucial thing on this task as it will deal with higher voltage which is 230VAC. As related to the previous process, then it proceeded to the combination of software and hardware by using relay.

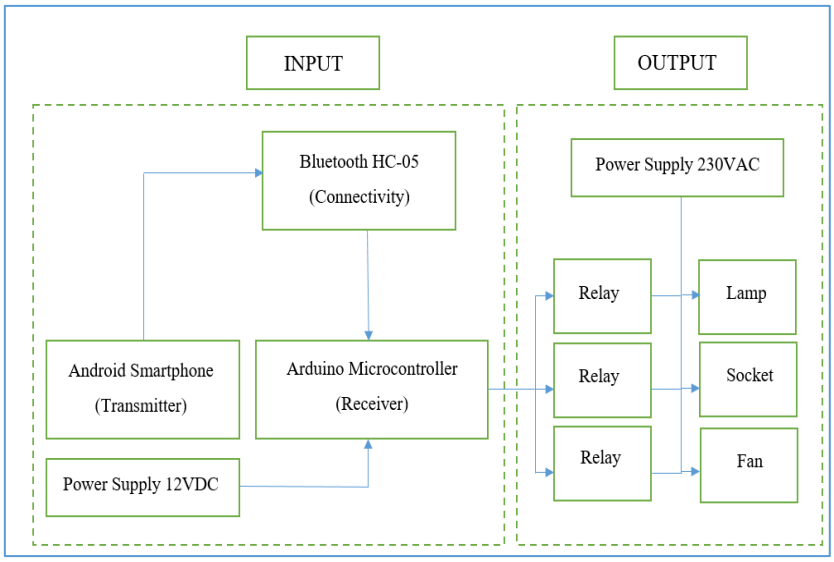

Fig. 1. Design concept

2.2 Project Schematic Diagram

By referring to Figure 2, the supply will connect to the Residual Current Circuit Breaker (RCCB), Earth-leakage Circuit Breaker (ELCB) and Main Circuit Breaker (MCB) to protect the loads and user if any faulty occur as it will deal a high voltage. A safety precaution is important to avoid any disaster [4]. The two ways switch is used in this project to select the system into manual or auto mode for controlling the loads. When the switch is select to manual, the system will on and off the loads

using a conventional switch. At this condition, this system will function like a normal housing system to on and off the loads manually using a switch.

Next, the system will be automate when the two ways switch is select to auto mode where it will give a path for current to flow to the relay. Arduino controller was placed near the distribution board to control the relay as itis function as a switch in this mode. The Android smartphone is connected to the system through Bluetooth connectivity, where Arduino received the information from smartphone to control the loads wirelessly [7-8]. Real scale home control automation system for different load application using smartphone can be seen in Figure 3.

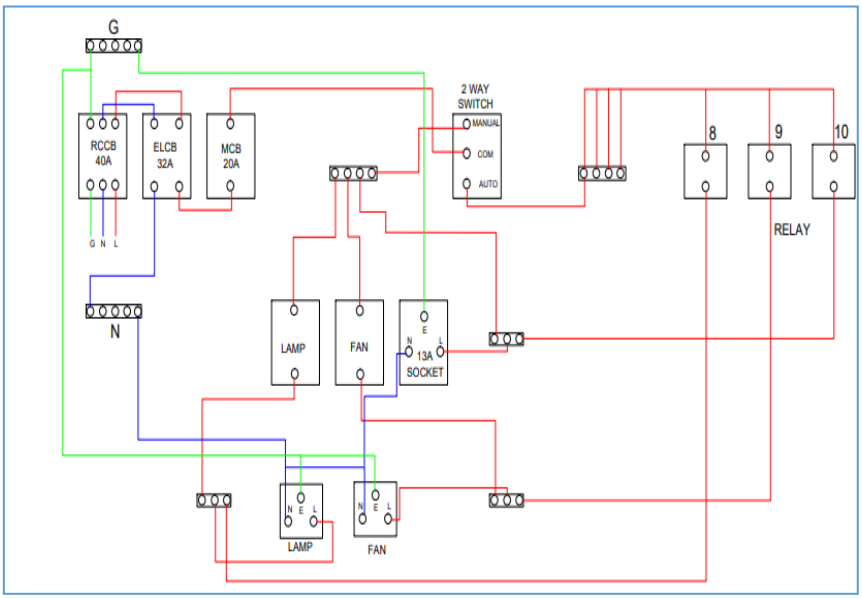

Fig. 2. Schematic diagram of the project for home wiring system

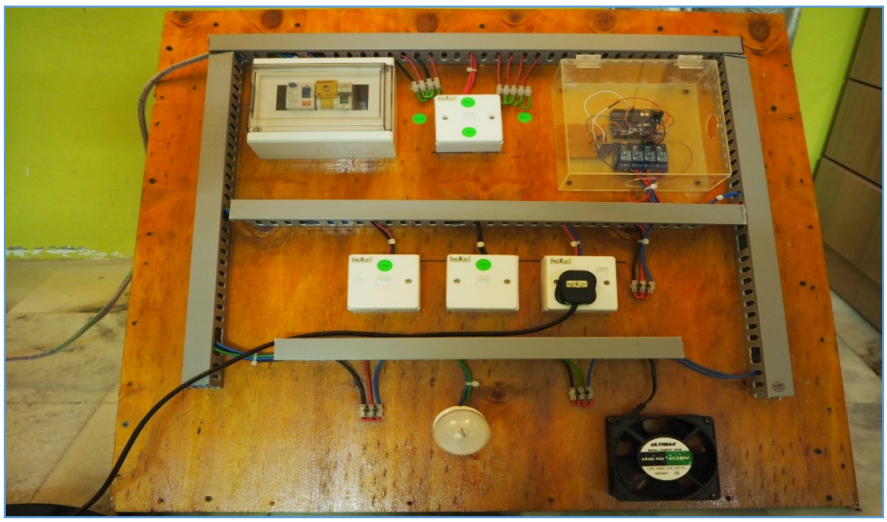

Fig. 3. Real scale home control automation system for different load application using smartphone

2.2 Android Application Interface

The Android application on the smartphone was developed as shown in Figure 4(a). The starter up page developed Android application can be seen in Figure 4(b). There are three different button icons created to control the loads, which are lamp, fan and socket as shown in Figure 4(c). The Bluetooth button icon is for the user to connect to the system and the password requirement need to be filled to connect with the system for a safety counter measure [9-11]. To control the loads, users can tap on the icons which loads they want to control.

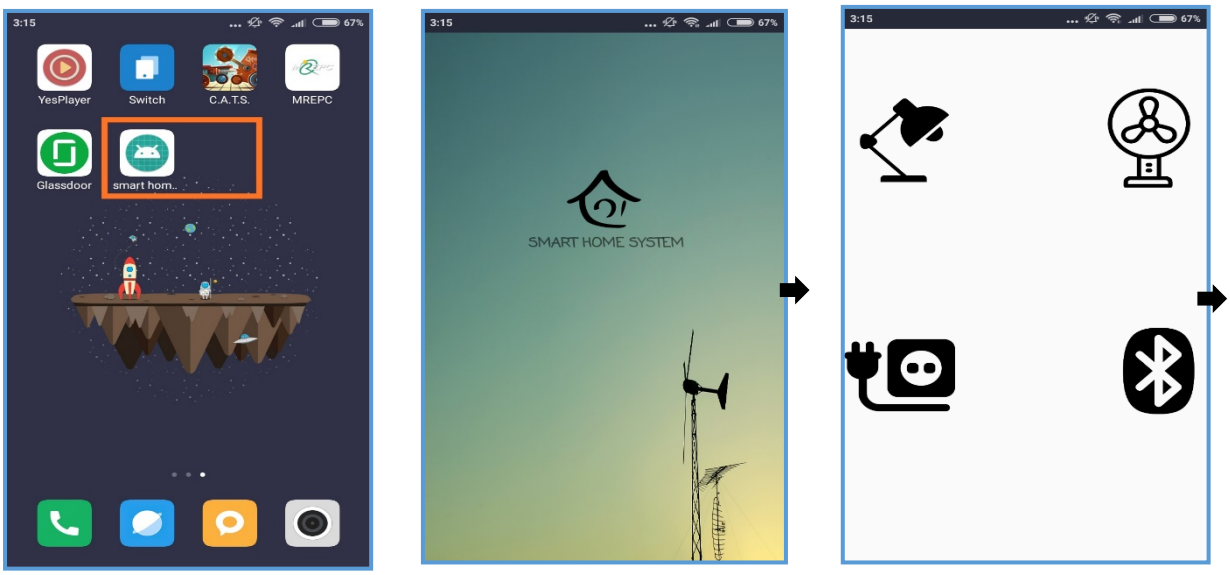

(a) (b) (c)

Fig. 4. Android Application Interface

5. Results and Discussion

The data was taken based on the range of the distance, height and time taken that Bluetooth device able to receive and transmit signal between smartphone and Arduino controller to control on and off the loads with and without obstacle. Apart from that, the analysis focused on product performance based on accuracy, sensitivity and specificity.

5.1 Comparison of Product Performance Based on Time Taken for Load with Obstacle and Without Obstacle

The experiment then proceed with the comparison of product performance based on time taken between with and without obstacle for both limitation of distance and height. The result can be refer at Figure 5 for distance and Figure 6 for height limitation of the system. According to the result, the time taken of product performance with and without obstacle are approximately same. However, the presence of obstacles like doors, walls and floor will affect the limitation of range greatly [12-13]. The distance with obstacle it can be up to only 15 meters and 3 meters for height limitation of range for Bluetooth module transmit and receive data to the controller. Apart from that, based on the collected data the Bluetooth module can transmit and receive signal between controller up to 33 meters distance and 4 meters height range of limitation for the system test without obstacle.

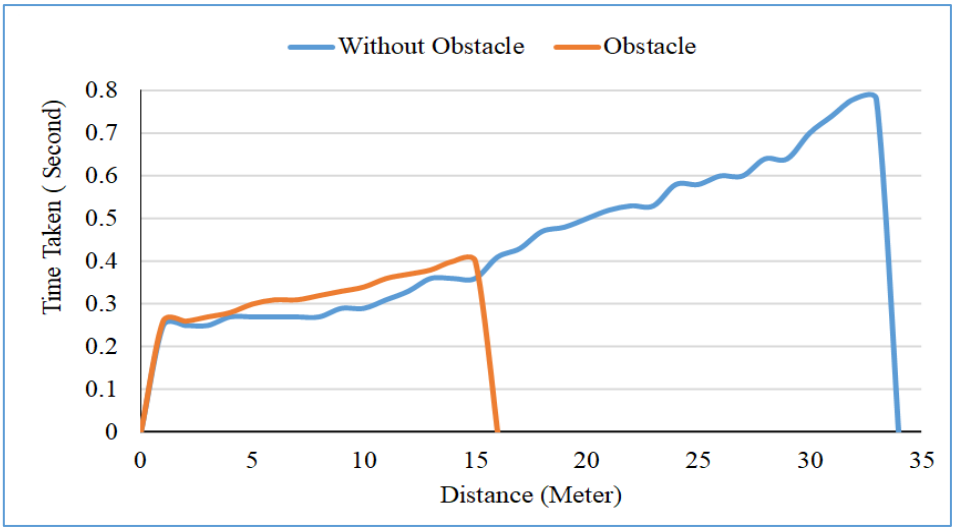

Fig. 5. Graph comparison performance of product distance limitation with and without obstacle

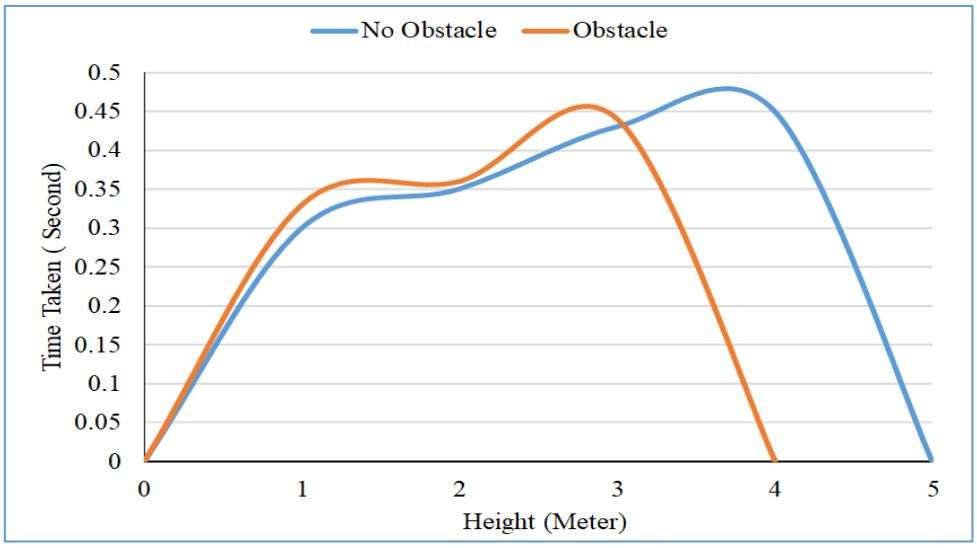

Fig. 6. Graph comparison performance of product height limitation with and without obstacle

5.2 Product Performance based on Accuracy, Sensitivity and Specificity

In order to determine and evaluate the accuracy, sensitivity and specificity of the product performance, a confusion matrix approach was applied. The three different ranges has been selected which are 10 meters, 15 meters and 20 meters respectively as shown in Table 1. For each range, it will be tested by controlling on and off loads for 10 times repetitively. The results then transferred to the Table 2, a confusion matrix for binary classifier to determine the product performance by calculating the collected data.

Table 1
Confusion Matrix

	Distance (Meter)		
Repetitive	10	15	20
1	✓	✓	✓
2	✓	✓	✓
3	✓	✓	✓
4	✓	✓	✓
5	✓	✓	×
6	✓	✓	×
7	✓	✓	✓
8	✓	✓	×
9	✓	✓	✓
10	✓	✓	×

Table 2
Confusion Matrix for a binary classifier

	Distance Prediction (Meter)		
Actual Distance (Meter)	10	15	20
10	10	0	0
15	0	10	0
20	2	2	6

From the Table 2, confusion matrix for a binary classifier the data can be extract and calculated to get the sensitivity, specificity and accuracy value of the system. The value for true positive, TP is 10 and false negative, FN is 0. Next, the value for true negative, TN is the sum of 10, 2, 6 and 10, while false positive, FP equal to 2. Therefore, product performance based on sensitivity, specificity and accuracy are then proceed as in Table 3.

Table 3
Product performance based on accuracy, sensitivity and specificity

	Product performance
Sensitivity	1.0
Specificity	0.9
Accuracy	93.33%

From the product performance, the value for sensitivity and specificity is 1.0 and 0.9 respectively. The accuracy of the system is 93.33% as it show an excellence result for the Bluetooth module accuracy in transmitting and receiving signal between the Arduino via Android application smartphone.

6. Conclusion

As a conclusion, the range distance without obstacle is 33 meters range within 0.78 seconds while with obstacle the system can be automate until 15 meters distance within 0.40 seconds. The range height without obstacle is 4 meters range within 0.45 seconds while with obstacle the system can be automate until 3 meters distance within 0.44 seconds. Apart from that, the time taken of product performance with and without obstacle are approximately same. However, the presence of obstacles like doors, walls and floor will affect the limitation of range greatly. In order to determine and evaluate the accuracy, sensitivity and specificity of the product performance, a confusion

matrix approach was applied. The three different ranges has been selected which are 10 meters, 15 meters and 20 meters respectively. Lastly, the performance of Android application analysis is focus on the system traits, where it shows the condition of the system when successfully connect and the condition when the Android application is crash due to range limitation and apps crash.

References

[1] Kamelia, Lia, S. R. Alfin Noorhassan, Mada Sanjaya, and Edi Mulyana WS. "Door-automation system using bluetooth-based android for mobile phone." *ARPN Journal of Engineering and Applied Sciences* 9, no. 10 (2014): 1759-1762.

[2] Das, Sukhen, Sanjoy Ganguly, Souvik Ghosh, Rishiraj Sarker, and Debaparna Sengupta. "A bluetooth based sophisticated home automation system using smartphone." In *Intelligent Control Power and Instrumentation (ICICPI), International Conference on*, pp. 236-240. IEEE, 2016.

[3] Neng- Shiang Liang; Li-Chen Fu; Chao-Lin Wu, "An integrated, flexible, and Internet-based control architecture for home automation system in the internet era". Proceedings ICRA `02. IEEE International Conference on Robotics and Automation,Vol. 2, pp.1101-1106, 2013.

[4] Erol, Yavuz, Hasan H. Balik, Serkan Inal, and Duygu Karabulut. "Safe and secure PIC based remote control application for intelligent home." *IJCSNS* 7, no. 5 (2007): 179.

[5] Sonawane, Nupur K., Payal D. Waghchavare, and Kajal A. Patel. "Bluetooth based device automation system using cellphone." *International Journal of Computer Applications & Information Technology* 7, no. 1 (2014).

[6] Sriskanthan, N., F. Tan, and A. Karande. "Bluetooth based home automation system." *Microprocessors and microsystems* 26, no. 6 (2002): 281-289.

[7] Sonawane, Nupur K., Payal D. Waghchavare, and Kajal A. Patel. "Bluetooth based device automation system using cellphone." *International Journal of Computer Applications & Information Technology* 7, no. 1 (2014).

[8] Sriskanthan, N., F. Tan, and A. Karande. "Bluetooth based home automation system." *Microprocessors and microsystems* 26, no. 6 (2002): 281-289.

[9] Petry, Clovis Antonio, Fernando S. Pacheco, Daniel Lohmann, Gabriela A. Correa, and Paulo Moura. "Project teaching beyond Physics: Integrating Arduino to the laboratory." In *Technologies Applied to Electronics Teaching (TAEE), 2016*, pp. 1-6. IEEE, 2016.

[10] Manoj, S., S. Sri Ram Ganesh, and M. Janarthanan. "IOT based Energy Management System by Using Raspberry pi ARM cortex." *International Journal of Engineering Research and General Science* 4, no. 3 (2016).

[11] Anwaarullah, Syed, and S. V. Altaf. "RTOS based home automation system using Android." *international journal of advanced Trends in computer science and engineering* 2, no. 1 (2013): 480-484.

[12] Kumar, Konapalli Siva, B. Sekhar, and Andhra Pradesh. "Android Based Smart Home Implementation by Using Bluetooth Connectivity."

[13] Liang, Neng-Shiang, Li-Chen Fu, and Chao-Lin Wu. "An integrated, flexible, and Internet-based control architecture for home automation system in the Internet era." In *Robotics and Automation, 2002. Proceedings. ICRA'02. IEEE International Conference on*, vol. 2, pp. 1101-1106. IEEE, 2002.